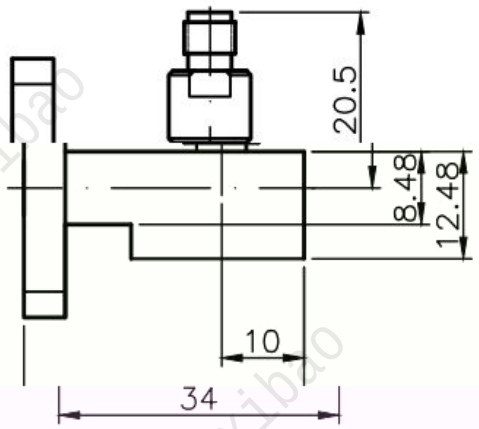

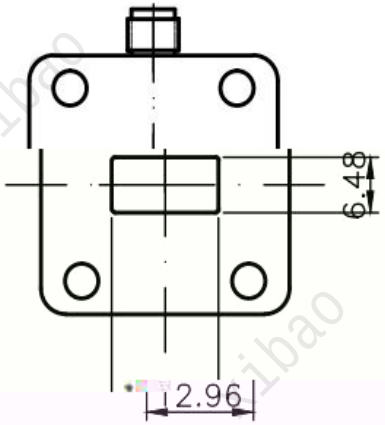

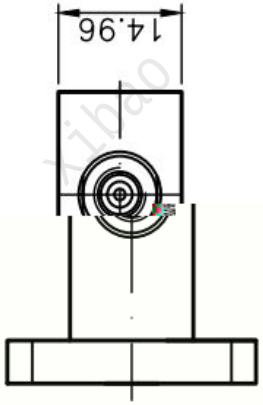

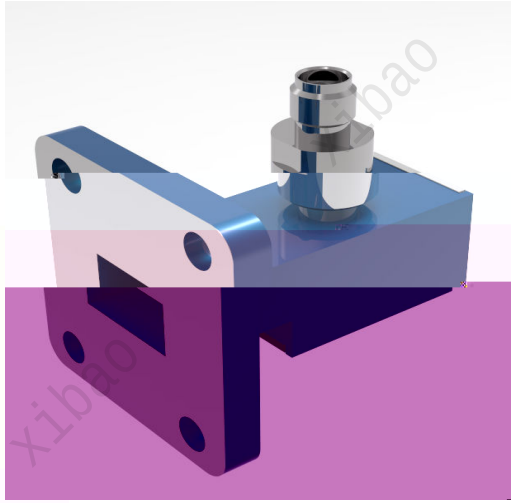

Specification

Model selected

Instruction

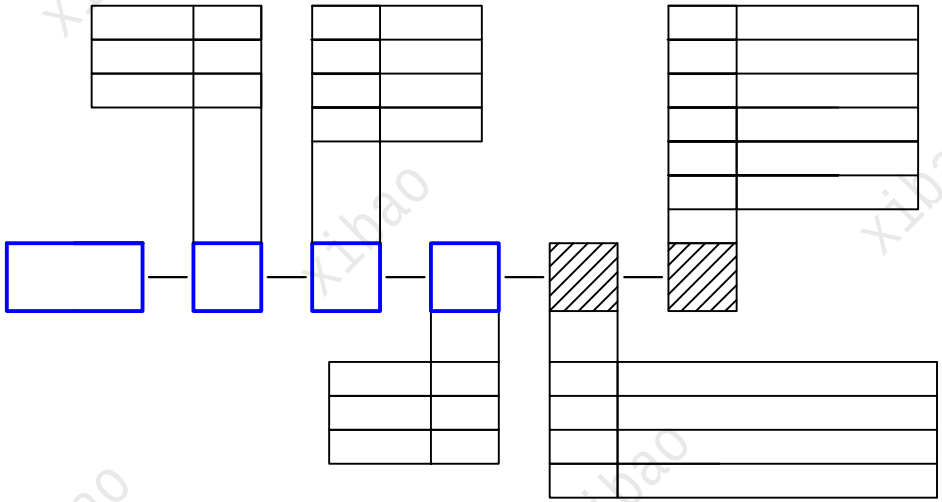

Blue boxes are must required fields. Shadow boxes aren't option, randomly selected according to inventory.

3

Beijing Xibao Electronic Technology Co.,Ltd

51 18

51 18